**EVAL1Z**
**Input: 12V Output: 1.5V/30A**
**Frequency: 220KHz**

**input rising shreshold: 9.7V**
**input falling shreshold: 9.2V**

**Upper MOS: RJK0305**
**Lower MOS: RJK0301**
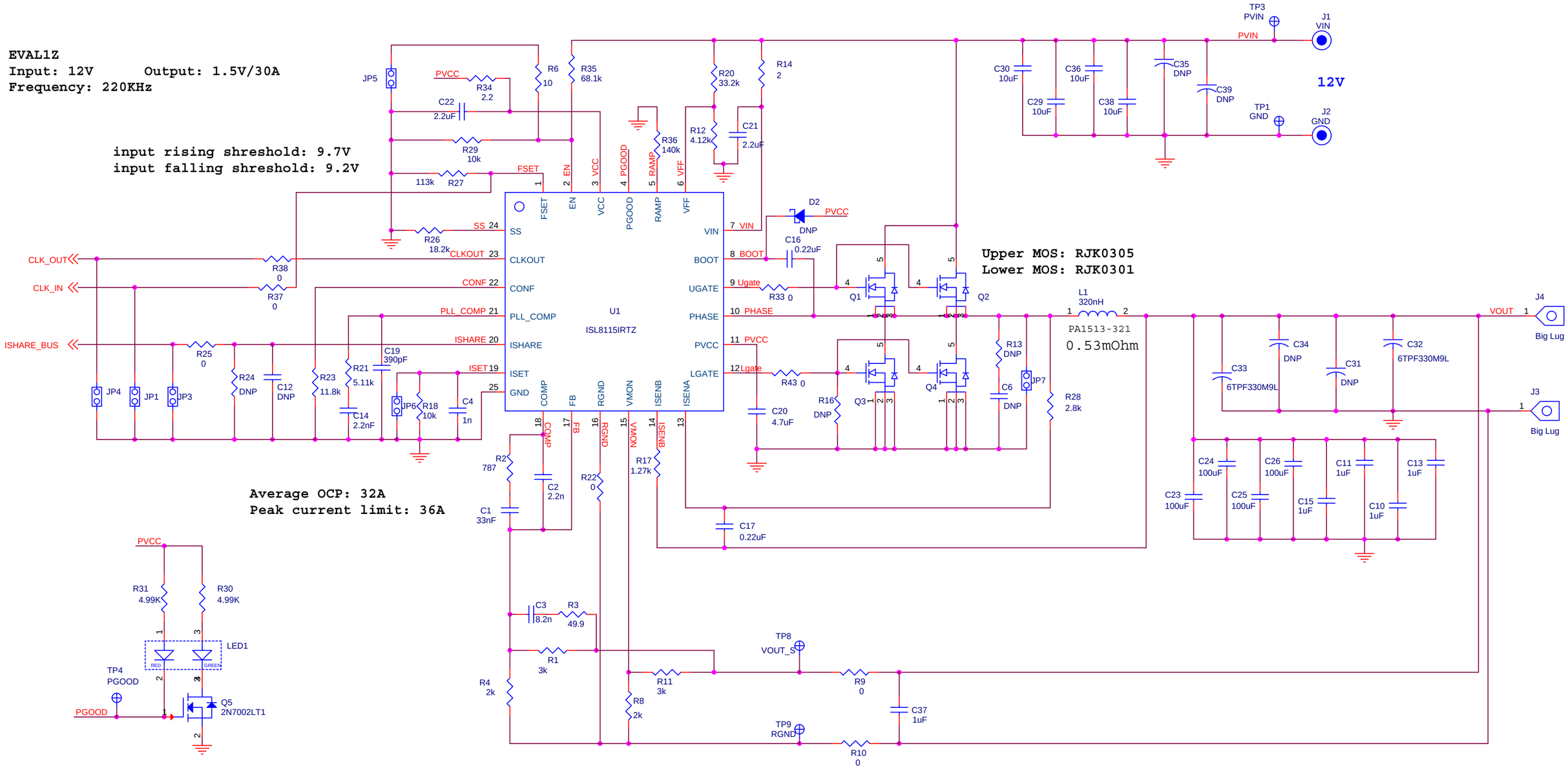
**Average OCP: 32A**
**Peak current limit: 36A**